INVESTIGATION REPORT

Embezzlement of funds in the Netherlands

EUR 113,000 misappropriated from Global Fund partners

GF-OIG-22-001
24 January 2022
Geneva, Switzerland

THE GLOBAL FUND
Office of the Inspector General

What is the Office of the Inspector General?

The Global Fund has zero tolerance for fraud, corruption, human rights abuses, and waste that prevent resources from reaching the people who need them. Through its audits, investigations and advisory work, the Office of the Inspector General safeguards the Global Fund's assets, investments, reputation, and sustainability, reporting fully and transparently on abuse.

If you suspect irregularities or wrongdoing in programs financed by the Global Fund, you should report them to us.

Online Form >
Available in English, French, Russian, Spanish
Email: hotline@theglobalfund.org
Free Telephone: +1 704 541 6918

Learn about fraud, abuse and human rights violations at the OIG's e-learning site, **www.ispeakoutnow.org**



Table of Contents

1. Executive Summary 3
2. Findings 6
2.1 The former Executive Director of Supplier 1 embezzled EUR 113,000 from Supplier 1, Supplier 2 and the Communities Delegation 6
2.2 Supplier 2 breached Global Fund contractual terms by being unable to provide access to accounts with irregularities. 9
2.3 Poor internal controls and missed red flags allowed opportunistic fraud to escalate over time 10
3. Global Fund Response 13

Annex A: Estimated Global Fund financing embezzled through overall suspicious transactions 14
Annex B: Outline of Global Fund connection to parties in scope, and the inter-dependent relationships to former ED 15
Annex C: Overview of payments based on falsified requests to third-party accounts controlled by former ED 16
Annex D: Methodology 17

24 January 2022
Geneva, Switzerland

1. Executive Summary

1.1 Investigation at a glance

The former Executive Director of Supplier 1, a Netherlands-based Civil Society Organization, embezzled an estimated EUR 113,000 in Global Fund funding from Supplier 1, from the Supplier 2 and from the Global Fund Board's Communities Delegation ('the parties') between 2018 and 2020.

These embezzled funds were among over EUR 550,000 in suspicious transactions undertaken by the individual, which involved multiple donors' funds from the three parties. Various fraudulent practices were employed, such as creating falsified payment requests, making unsupported bank transfers, and abusing access to corporate bank accounts and a corporate credit card with extensive unsupported and personal expenditure.

Supplier 1 and Supplier 2 lacked effective internal controls, as well as escalation and oversight mechanisms which could have identified and stopped the wrongdoing at an earlier stage.

1.2 Genesis and Scope

In July 2020, the Office of the Inspector General (OIG) received multiple allegations of financial irregularities in accounts connected to Supplier 1. Supplier 1 self-reported that their former Executive Director (hereafter: 'the former ED') allegedly made multiple unsupported payments, which only came to light after they were terminated from their position. The individual had worked with Supplier 1 since 2010 and was ED from January 2019 to until their employment was terminated in May 2020. They also attended Global Fund board meetings as a Delegate of the Communities Delegation between 2015 and 2019.

The OIG subsequently launched an investigation covering financial transactions made between 2018 and 2020. The OIG collected and analyzed financial records from bank accounts of the parties in scope, which contained funds from the Global Fund as well as other donors. The OIG also obtained and reviewed electronic records (e.g. email exchanges), and interviewed a number of witnesses.

Supplier 1, through its Executive Director ad interim and its Supervisory Board, cooperated closely with the OIG's investigation. Supplier 2 and the Communities Delegation also assisted the investigation. The OIG invited the former Executive Director to multiple interviews, but they did not respond to our requests.

1.3 Findings

- Between 2018 and 2020, the former ED of Supplier 1 embezzled EUR 113,000 of Global Fund money. This amount was among over EUR 550,000 of suspicious transactions from the bank accounts of Supplier 1, Supplier 2 and the Communities Delegation, which each contained funds from multiple donors.
- While Supplier 2 did not deliberately obstruct the OIG investigation, it breached its contractual terms with the Global Fund by being unable to provide accounts with suspected irregularities
  (Supplier 2 did not possess those records as they were maintained by the former ED).
- Assurance mechanisms were ineffective. Supplier 1 and Supplier 2 missed red flags of fraud, and were not equipped to identify or act upon wrongdoing. The Global Fund Secretariat's oversight for this type of supplier is weak.

1.4 Context

Civil society, and communities living with and impacted by the three diseases, are at the heart of everything the Global Fund does. They play an active role at every level of operations, from policy development to implementation. Civil society and Communities are represented through three of the 20 voting seats on the Global Fund Board. Community and civil society organizations also play a central role at the local level, serving as implementers of Global Fund grants. More information about the role of civil society and communities can be found at www.theglobalfund.org/en/civil-society.

Three civil society bodies that receive Global Fund funding are concerned in this investigation: two suppliers and one Board constituency.

- **Supplier 1** was a supplier of advocacy services, including supporting the sustainability of the Global Fund Advocates Network (GFAN) operations and hosting the GFAN Secretariat. Supplier 1 received EUR 337,560 from the Global Fund in 2019-2020 under various purchase orders, representing 20% of Supplier 1's donor revenue during this period. Supplier 1 was a long-standing and well-regarded Global Fund partner.
- **Supplier 2** provides international TB advocacy services. The Global Fund awarded Supplier 2 a US $140,250 grant for long term capacity development, funded under a Strategic Initiative to develop civil society organizations and promote community mobilization. The funds were paid in two tranches in 2018 and 2019, and represented 76% of Supplier 2's donor funding in the period.
- The **Communities Delegation** represents individuals living with HIV and affected by TB and malaria at the Global Fund Board, as a full voting member. The Global Fund is the Delegation's primary donor, and combined with funding for the Implementers Group which was also overseen by the Delegation, it received EUR 188,219 in funding in 2019-2020 under the Global Fund Constituency Funding Policy.

In addition to being a Global Fund supplier, Supplier 1 served as 'Recipient Organization' (also known as a 'Fiscal Host') for the Communities Delegation and managed its finances, including the funding received from the Global Fund. Appointing a Fiscal Host is not unusual, given that Board delegations are often not registered entities, may have difficulties in opening bank accounts, and members change frequently. Supplier 1 maintained a segregated bank account for the Communities Delegation, separate to its own operating account. Supplier 1's former ED was an account signatory of both accounts. The individual also served as Chairman of Supplier 2, essentially as an unofficial Fiscal Host, and was sole signatory of Supplier 2's bank accounts.

Methodology for financial analysis

Annex B of this report details the inter-dependent relationships between the parties and the former ED. Combined with the fact that the underlying funds came from multiple donors, this resulted in a complex web of transactions that required careful analysis.

As each of the parties' bank accounts contained 'co-mingled' funds from the Global Fund and other donors, it was not always possible to trace individual suspicious transactions to specific Global Fund grants. Therefore, the OIG first analyzed the bank accounts in scope for suspicious or unsupported transactions, which resulted in the identification of over EUR 550,000 in suspicious transactions. Some of those transactions involved unsupported transfers between the parties in the investigation, and the OIG considered this when analyzing the value of suspicious transactions or 'net-loss' from each party. Supplier 1 also proactively recovered over EUR 80,000 from the former ED in 2020, which the OIG also considered when estimating the funds at risk.

Subsequently, the OIG estimated the value of Global Fund funds embezzled through combined analysis of the transactions in the bank accounts, relevant financial reporting such as accounting ledgers (which show how financial transactions are allocated to underlying activities or project budgets) and project reporting provided to the Global Fund from the parties in scope. Based on a combination of these records, the OIG was able to

calculate the estimated Global Fund exposure resulting from the overall suspicious transactions on a party-by-party basis, as outlined in Annex A.

1.5 Impact of the investigation

This investigation underlines how opportunistic fraud, left undetected, can expand into more serious and systemic irregularities. In this case, the extent of the former ED's unsupported transactions, along with a lack of sufficient fundraising, contributed to Supplier 1 entering liquidation in early 2021. Fortunately, Supplier 1's interim management transferred the majority of programs to alternate providers to avoid disruption to activities.

The investigation also highlights a number of important aspects: the challenges faced by small organizations which lack dedicated compliance resources or oversight mechanisms to effectively detect and respond to fraud, the risks caused by controls that rely substantively on one individual, how power imbalances can undermine the effectiveness of controls or avenues to 'speak out' against potential wrongdoing, as well as the risks of insufficient conflict of interest management when individuals have roles in multiple organizations.

From a Global Fund perspective, the case raises questions about proportionate oversight and monitoring of non-grant partners, particularly those fulfilling a vital programmatic activity such as community engagement and advocacy. Monitoring the value and impact of suppliers providing less-tangible services can be difficult, and requires adequate capacity assessment and project management. The Global Fund could offer more support to community-based partners and to suppliers using third parties for financial management, to better promote fraud awareness and help them adopt more robust controls. Additionally, the investigation identified potential recoveries for referral to the Recoveries Committee.

Due to the nature of the information obtained during the investigation, the OIG will consider referring Finding 2.1 to appropriate law enforcement authorities.

2. Findings

2.1 The former Executive Director of Supplier 1 embezzled EUR 113,000 from Supplier 1, Supplier 2 and the Communities Delegation

The OIG found extensive suspicious transactions linked to the former ED, including falsified payment requests, suspicious bank transfers to their own accounts, extensive use of money transfer agents, and frequent unsupported cash withdrawals and credit card payments. They also transferred funds embezzled from Supplier 1 through Supplier 2 bank accounts, misrepresenting them as Global Fund grant funds to disguise their illicit nature. This finding provides the details of over EUR 550,000 in suspicious transactions which the OIG identified in the parties' co-mingled bank accounts.

As detailed in Section 1.4, after identifying these overall suspicious transactions, the OIG then estimated the direct exposure to the Global Fund based on relevant financial records. The OIG found approximately EUR 113,000 of Global Fund resources were embezzled as a result of the overall suspicious transactions.

Supplier 1 paid EUR 101,971 to accounts controlled by the former ED, based on falsified payment requests

In 2019, the former ED made multiple payments to accounts they controlled in the names of other organizations, as shown in Annex C. The payments were based on falsified payment requests.

Between April and October 2019, the former ED used falsified payment requests to divert EUR 31,971 from Supplier 1 in six transfers to "Young and Positive", a civil society foundation which the former ED had established in 2003, and which they effectively controlled. These payment requests contained inconsistencies and evidence of falsification. No activities as described on the payment requests could be confirmed to have taken place, nor a valid contractual relationship between Supplier 1 and "Young and Positive" identified.

On 22 July 2019, the former ED transferred EUR 70,000 from Supplier 1 to a Supplier 2 account ('Initial Account'), presenting a forged "Agreement" as justification for the payment. The individual had sole control of the Supplier 2 Initial Account. Supplier 2 representatives confirmed there was no valid agreement or rationale for the funds to have been transferred from Supplier 1. The following day, the former ED transferred EUR 60,204 to a second, previously undisclosed, Supplier 2 bank account which the former ED had opened, employing a money laundering technique known as 'layering', commonly used to obscure the source of suspicious transactions. The former ED then misrepresented the source of funds to Supplier 2, stating they came from the Global Fund, as opposed to Supplier 1. Separately, the former ED made two further transfers from Supplier 1 to Supplier 2, totaling EUR 4,446, in September 2019 and April 2020, for unverified purposes.

EUR 74,000 unaccounted for from Supplier 2 bank accounts

Of the two Supplier 2 accounts controlled by the former ED, the OIG estimates that at least EUR 23,795 remains unaccounted for from the Initial Account, which appeared to be inactive as of mid-2020, and EUR 50,635 from the Secondary Account, being the closing balance as of April 2020 (the last available information).

EUR 65,000 in Supplier 2 expenses paid by Supplier 1 without justification

The OIG assesses that the EUR 70,000 diversion from Supplier 1 occurred to hide potential misuse of Global Fund funds from the Supplier 2 Initial Account. Despite the Supplier 2 Initial Account having been credited with over EUR 60,000 from the Global Fund on or around 11 October 2018, at least EUR 53,189 in funds

from the Supplier 1 Main Account was used without justification to pay Supplier 2's operating expenses throughout 2019, of which EUR 26,139 was not reimbursed.

A further EUR 39,000 of the former ED's 2018 Supplier 1 credit card expenses was recorded as Supplier 2 related, but the OIG found this could not reliably be shown to be genuine Supplier 2 expenses and was more likely personal expenses, incorrectly recorded. These 2018 expenses were partially offset by EUR 15,584 misappropriated from Supplier 2 to repay Supplier 1, without supporting documentation.

Failure to segregate funds and conflicts of interest in transactions

By making numerous unsupported transfers between Supplier 1 and Supplier 2, the former Executive Director abused their position as a Director of the two entities. They also failed to declare the conflict of interest of being a controlling party of both parties involved in the transactions, contrary to the Supplier 1 Articles of Association, Global Fund Standard Terms and Conditions, and the Global Fund Supplier Code of Conduct.

The former ED did not properly segregate funds, by using Communities Delegation account funds to pay a EUR 14,659 Supplier 1 taxation obligation. They also redirected a EUR 31,605 grant from another donor provided to the Communities Delegation account back to Supplier 1, where the funds were subsequently used for general purposes.

The former ED also controlled various accounts with two online money transfer services in the names of Supplier 2, Young and Positive, Supplier 1 and in their own name, from approximately July 2019. In October 2019, 13 transactions were made using these accounts. Forensic evidence showed that the individual received both payment and beneficiary notifications, indicating that the majority of these transactions involved sending money between accounts they controlled. These transfers were largely funded by EUR 9,000 added to one Supplier 2 account, and EUR 2,550 transferred from the Supplier 1 Main Account to another Supplier 2 account.

EUR 55,572 transferred to the Executive Director's personal bank accounts

Between September 2019 and April 2020, the former ED made five suspicious payments totalling EUR 33,696 to a personal credit card from the Supplier 1 Main Account and the Communities Delegation Account. The OIG found no evidence to justify these transfers.

During 2019 and 2020, the former ED received a further EUR 21,876 from Supplier 1 for reimbursements or Daily Subsistence Allowances that were either unsupported or were duplicative of expenses paid with their Supplier 1 credit card. In one case, they claimed a EUR 5,000 reimbursement for hotel costs for a September 2019 trip to New York, justified as having paid for the hotel with a personal credit card. In fact, they paid for the hotel using the Supplier 1 credit card.

EUR 12,888 of Supplier 1-funded cash, goods and travel costs given to a personal associate

During 2018 and 2019, the former ED provided various travel expenses, daily subsistence allowances and purchases funded by Supplier 1 valued at EUR 12,888 to a personal acquaintance. With no evidence of a bona-fide commercial relationship between this third party and Supplier 1, the OIG concludes that the money and goods were embezzled.

EUR 200,000 of unsupported cash and card transactions

The former ED used their access to Supplier 1 funds, including a commercial credit card and a separate bank card both linked to the Supplier 1 Main Account, to embezzle EUR 200,000 through extensive unsupported cash withdrawals and personal transactions.

During 2019 and 2020, the former ED used these cards to withdraw 63,876 from cash machines in the Netherlands, the United States, Switzerland and the UK. A number of these cash withdrawals were falsely recorded in the Supplier 1 ledger as Daily Subsistence Allowances[1], while a further EUR 4,169 in cash from the Communities Delegation Account was given to the former ED in March 2020 and is unaccounted for.

The former ED also made over 100 payments totaling EUR 63,511 to money transfer agents and online remittance services, such as Western Union and PayPal, from their Supplier 1 cards. While such methods can be efficient and cost effective to remit small sums internationally, they proved problematic in this case: in the absence of justification or appropriate record keeping, there was no way to know who was receiving the sums that the former ED was transferring.

The OIG identified at least EUR 77,429 in additional unsupported and apparent personal expenses incurred by the former ED and paid by Supplier 1 between 2019 and 2020, such as luxury car hire and hotel stays in Amsterdam with no identified business need, as well as miscellaneous purchases of electronics, clothes, furniture, flight upgrades and mobile phone subscriptions.

A significant proportion of the former ED's Supplier 1 credit card charges were recorded inaccurately in Supplier 1 accounting ledgers. In 2018, over EUR 60,000 of credit card expenses were booked into six different unallocated expense accounts, indicating they could not be allocated to recognized Supplier 1 activities or budget lines. Some of these unsupported expenses were offset by payments from Young and Positive and Supplier 2 to Supplier 1 in December 2018. In 2019, the former ED requested a new set of ledgers, starting 'fresh' accounts in the accounting system of Supplier 1.

Global Fund monies connected to the suspicious transactions were embezzled.
An estimated EUR 113,000 of Global Fund monies were embezzled from respective Global Fund partners as a result of the suspicious transactions described above (detailed in Annex A). As these funds were spent outside the purposes for which they were provided, and lacked adequate supporting documentation, they are non-compliant and potentially recoverable.

The OIG noted at the conclusion of the investigation that Global Fund processes for the referral of potentially recoverable non-grant funds are currently unclear.

[1] Daily Subsistence Allowances or 'Per Diems' are allowances for lodging, meals and other incidental travel expenses. They are particularly susceptible to fraud: see the 2021 OIG Investigation of Global Fund Grants in Namibia

2.2 Supplier 2 breached Global Fund contractual terms by being unable to provide access to accounts with irregularities

Supplier 2 was unable to provide the OIG with access to records or bank statements of their Initial Account. The former ED, who was the registered Chairperson of the Supplier 2 corporate entity and maintained their accounts with a Netherlands-based financial institution, did not provide the complete records to Supplier 2 during 2019, despite multiple requests. By not possessing the records, Supplier 2 breached the Global Fund's Standard Terms and Conditions of Purchase of Services (Standard Terms and Conditions) and the Global Fund Code of Conduct for Suppliers, which requires suppliers "to maintain … all financial and accounting related records" and to "make such records available to the Global Fund or its authorized representative."

Through not having access to the records, the OIG was unable to fully investigate the suspected diversion of funds from both Supplier 2 and Supplier 1 in Supplier 2's Initial Account, the beneficiary account credited by the Global Fund and from the EUR 70,000 transfer from Supplier 1.

Supplier 2's failure to provide evidence material to a Global Fund enquiry was not deliberate. Supplier 2 did not at any time possess the information and records required for this investigation, and relied solely on the former ED to execute payments and maintain records. The former ED repeatedly misrepresented the Supplier 2 bank account situation in email and board meetings when requested to provide updates by Supplier 2, and did not respond to Supplier 2's demands for access to the account or account statements from mid-2019 onwards. Supplier 2 did not intentionally conceal evidence, and was otherwise cooperative with this investigation.

2.3 Poor internal controls and missed red flags allowed opportunistic fraud to escalate over time

The findings of this investigation show how initially opportunistic fraudulent practices, such as abuse of a corporate credit card, can escalate into more complex – and financially material – fraudulent practices when left undetected or under weak controls. Both Supplier 1 and the former ED were long-standing, trusted partners of the Global Fund, underscoring that fraud can emanate from surprising and familiar places.

Missed opportunities to identify and halt the wrongdoing

Several "red flags" were missed by Supplier 1 and its external accountants. By any reasonable standards, the proportion of cash and credit card payments within Supplier 1 revenue was unusually high. From 2018 onwards, the former ED routinely utilized the full monthly EUR 10,000 credit card limit, including extensive cash withdrawals and personal spending. Six additional expense accounts were created in the 2018 ledgers to record spending which Supplier 1 could not otherwise register against existing activities.

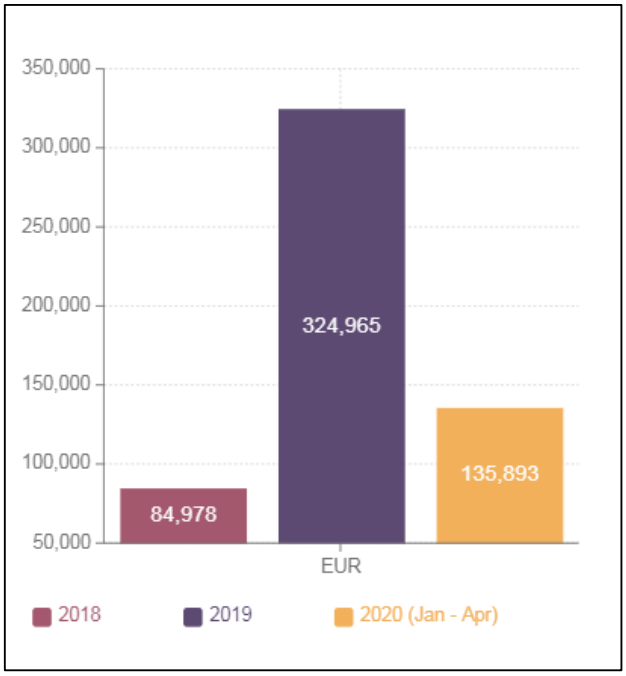

Figure 1: Value of suspicious transactions linked to former ED, all subject accounts. Note 2020 = four months to April.

If noticed and challenged earlier, the wrongdoing may have been halted. Once the former ED assumed the role in January 2019, they gained more authority, became more difficult to challenge, and it became much more problematic for Supplier 1 to monitor and identify their wrongdoing. OIG analysis showed that the value of suspicious transactions more than tripled from 2018 to 2019, after the individual was promoted to the Executive Director role. The abuses of the creation of false payment requests, making unsupported bank transfers, and abusing DSA entitlements.

Controls concentrated around the former ED, creating a power imbalance

Supplier 1 and Supplier 2 were small organizations that did not have dedicated compliance resources. While they had written policies, they relied heavily on trust between a small number of individuals, and especially on trust in the Executive Director.

There was also a power imbalance in Supplier 1, where the former ED occupied the top executive position and had the power and mandate to implement controls and run day-to-day affairs (including the Delegation Account). While the former ED reported to the Supplier 1 Supervisory Board, the Board did not (and was not required to under local law) monitor operational matters or undertake spot checks of operational accounts.

Supplier 1's Accounts Executive observed potential wrongdoing by the ED, to whom they reported, but could not get the former ED to submit timely or accurate supporting documentation for expenses, or curtail their behavior. They were unable to escalate their concerns to an independent person in a timely manner, as the Supplier 1 Supervisory Board did not have an established mechanism for escalating concerns around the ED.

Additional third-party risks impacted control mechanisms

This investigation highlights the additional risks created when funds are managed by third parties. In the case of Supplier 1, an external accountant was responsible for processing the data provided by Supplier 1. However, the former ED was the point of contact for the accountant's queries and there were significant delays in the finalization of the 2019 annual financial report. For the Communities Delegations and Supplier 2, the former ED was a third-party who did not provide accurate or timely financial information, seemingly to hide potential irregularities.

Supplier 2 lacked the structure and resources to ensure the former ED acted appropriately, or to react appropriately when wrongdoing became apparent. Supplier 2's CEO is India-based, lacking proximity to the Netherlands and knowledge of that jurisdiction, and Supplier 2 was completely reliant on the former ED to execute corporate affairs such as registration and bank account creation. Once the fraudulent activity became apparent, Supplier 2 was unable to mitigate it. They did not compel the former ED to provide timely reporting or access to financial records, and as of the date of this report, have not yet managed to remove the former ED from their incorporation or bank accounts.

The former ED was therefore a single point of failure for all three organizations, none of whom had the mechanisms in place to detect or prevent the fraudulent transactions detailed in this investigation. Regardless of whether they use third-party financial management, all suppliers retain responsibility for maintaining funds provided by the Global Fund and having access to accurate books and records, as per the Global Fund's Standard Terms and Conditions and the Global Fund Code of Conduct for Suppliers.

Global Fund oversight over non-traditional suppliers is insufficient

Global Fund assurance mechanisms tend to prioritize grant implementers under a risk-based approach, for example through detailed budgeting guidelines, programmatic monitoring and periodic Local Fund Agent reviews. The Global Fund engages a wide variety of suppliers under Purchase Orders, ranging from major commodity suppliers down to partner-advocacy services such as those covered in this investigation. Suppliers are largely responsible for implementing their own financial controls and fraud prevention activities. The Global Fund does not have a differentiated assurance approach to suppliers of less tangible services, such as advocacy or other community support, or specific budgeting guidance for non-grant expenditure.

Supplier 1 and Supplier 2 largely provided advocacy services, which can be difficult to quantify and monitor. They were more akin to specialized partners delivering programmatic activities than to typical suppliers. The Global Fund does not undertake sufficient and proportional performance and controls/ governance capacity assessments of these types of non-traditional suppliers, and does not have consistent or documented guidance on contract management mechanisms to ensure effective and efficient delivery of professional services such as advocacy.

While acknowledging that controls need to be proportionate to the size and complexity of an organization, the OIG noted that fraud was facilitated by weak and insufficient internal controls within the subject organizations:

- Credit cards, settled via direct debit without first being reviewed and approved, placed the risk of unapproved spending with the organization in the first instance, rather than the individual. Cash withdrawals were commonly used. To reduce the risk, and assuming credit cards were considered essential, cash withdrawals could have been disabled, and the lowest practical monthly limits established to reduce the risk of misuse.
- Payment controls could have been improved by technical solutions such as dual signatories to release payments through online bank accounts, to augment internal 'four-eyes' controls. Consideration

could also have been given to differentiated transfer approval limits, to balance flexibility with appropriate controls for larger external payments, for example by requesting supervisory board member approval.

- Conflicts of interest provisions did not fully identify secondary positions held by account signatories or executives, allowing the former ED to make transactions between entities they controlled.
- Cash and remittance services for DSA or other incidental payments were used extensively by Supplier 1 and the Delegation, but as not all payments were fully documented, it could not be confirmed that they reached the right people.
- Risks around the power imbalance of the former ED's executive roles in Supplier 1 and Supplier 2 were exacerbated by a lack of clear and established escalation procedures to allow relevant stakeholders to raise any issues about the individual in a timely fashion. These risks were increased by the fact that the Supplier 1 management board was constituted solely by the former ED.
- External bookkeepers or accountants should also have had the scope and capacity to identify and raise concerns or irregularities to appropriate independent persons, such as audit committees or other supervisory functions.

The Global Fund should adequately support partners with limited compliance capacity, including smaller civil society organizations, with a differentiated level of oversight and by developing their fraud awareness and capacity to maintain effective controls.

3. Global Fund Response

Action to be taken	Due date	Owner
1. Based on the findings of this report, the Secretariat will finalize and pursue from the relevant entity/entities an appropriate recoverable amount (if any, as determined by the Secretariat) from the non-compliant expenditures identified in this report.	30 September 2022	General Counsel and Head, Legal and Governance Department
2. The Secretariat will develop an SOP and guidance for all Global Fund focal points dealing with non-traditional suppliers to ensure robust implementation of underlying funds in line with expected services and consistent oversight including recovery of non-grant funds. In addition, the Secretariat will continue to raise awareness of the Global Fund's anti-fraud policies and principles. The focus should be placed on supporting Civil Society and Community-based partners who may have limited internal compliance resourcing or rely on third party financial management or controls.	31 December 2022	Chief Financial Officer

Annex A: Estimated Global Fund financing embezzled through overall suspicious transactions

Affected entity or account	Notes / methodology	Estimated GF funds at risk
Communities Delegation Account	Total unsupported transfers in bank account (less value of diverted funds from another donor grant)	**32,499**
Supplier 2	Unsupported payments from Supplier 2 account to Supplier 1	19,278
	Unaccounted funds from Supplier 2 bank accounts, less a) estimated Supplier 2 opex paid by Supplier 1 and b) pro-rata value of other donor grant in 2019	24,251
	Subtotal: Supplier 2	**43,529**
Supplier 1	Unspent GF project funds as per accounting ledger (less designated funds and subsequent GFAN subgrant via another partner)	**37,274**
Estimated GF funds at risk and potentially recoverable - EUR		**113,302**

Annex B: Outline of Global Fund connection to parties in scope, and the inter-dependent relationships to former ED

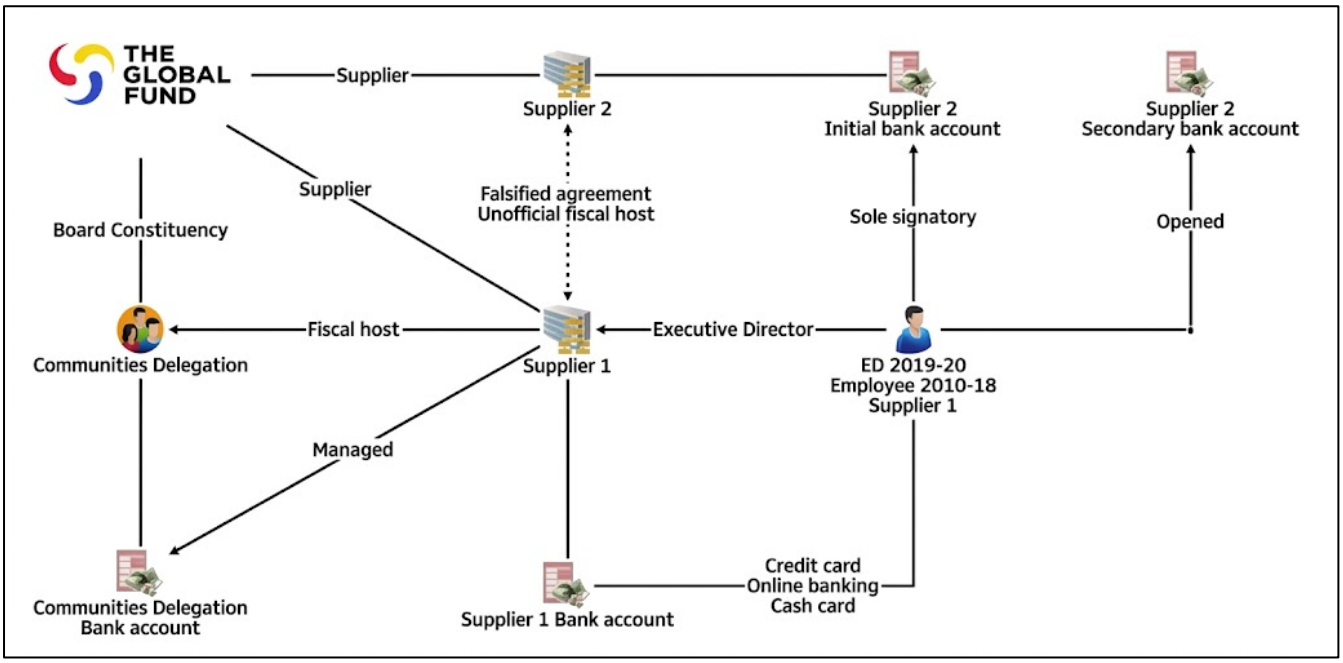

Figure 2: Diagram outlining the role of the former ED relative to the Global Fund partners in scope of this investigation

Annex C: Overview of payments based on falsified requests to third-party accounts controlled by former ED

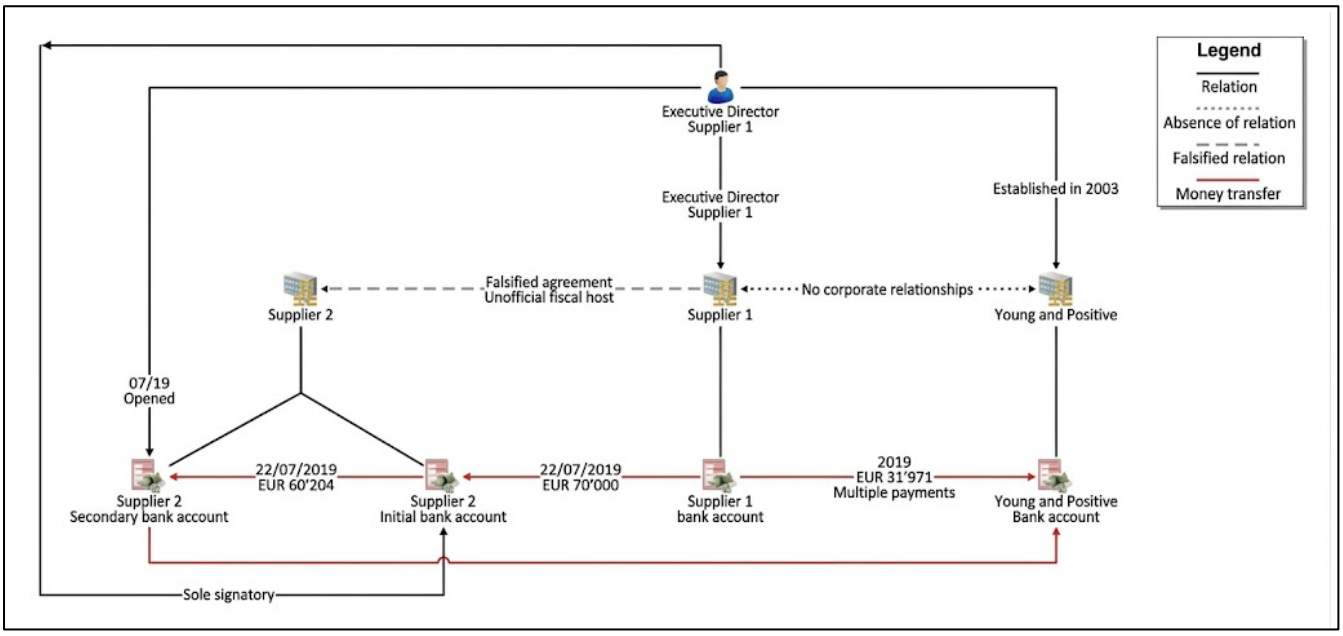

Figure 3: Outline of key suspicious transactions from Supplier 1 to other accounts controlled by the former ED, which relied on fraudulent payment requests. Note also the onward transactions between Supplier 2 accounts the day after the initial transfer of EUR 70,000 from Supplier 1 in July 2019. (Finding 2.1 refers)

Annex D: Methodology

Why we investigate: Wrongdoing, in all its forms, is a threat to the Global Fund's mission to end the AIDS, tuberculosis and malaria epidemics. It corrodes public health systems and facilitates human rights abuses, ultimately stunting the quality and quantity of interventions needed to save lives. It diverts funds, medicines and other resources away from countries and communities in need. It limits the Global Fund's impact and reduces the trust that is essential to the Global Fund's multi-stakeholder partnership model.

What we investigate: The OIG is mandated to investigate any use of Global Fund funds, whether by the Global Fund Secretariat, grant recipients, or their suppliers. OIG investigations identify instances of wrongdoing, such as fraud, corruption and other types of non-compliance with grant agreements. The Global Fund Policy to Combat Fraud and Corruption[2] outlines all prohibited practices, which will result in investigations.

OIG investigations aim to:

(i) identify the nature and extent of wrongdoing affecting Global Fund grants;
(ii) identify the entities responsible for such wrongdoing;
(iii) determine the amount of grant funds that may have been compromised by wrongdoing; and
(iv) place the Global Fund in the best position to recover funds, and take remedial and preventive action, by identifying where and how the misused funds have been spent.

The OIG conducts administrative, not criminal, investigations. It is recipients' responsibility to demonstrate that their use of grant funds complies with grant agreements. OIG findings are based on facts and related analysis, which may include drawing reasonable inferences. Findings are established by a preponderance of evidence. All available information, inculpatory or exculpatory, is considered by the OIG.[3] As an administrative body, the OIG has no law enforcement powers. It cannot issue subpoenas or initiate criminal prosecutions. As a result, its ability to obtain information is limited to the access rights it has under the contracts the Global Fund enters into with its recipients, and on the willingness of witnesses and other interested parties to voluntarily provide information.

The OIG bases its investigations on the contractual commitments undertaken by recipients and suppliers. Principal Recipients are contractually liable to the Global Fund for the use of all grant funds, including those disbursed to Sub-recipients and paid to suppliers. The Global Fund's Code of Conduct for Suppliers[4] and Code of Conduct for Recipients provide additional principles, which recipients and suppliers must respect. The Global Fund Guidelines for Grant Budgeting define compliant expenditures as those that have been incurred in compliance with the terms of the relevant grant agreement (or have otherwise been pre-approved in writing by the Global Fund) and have been validated by the Global Fund Secretariat and/or its assurance providers based on documentary evidence.

[2] (16.11.2017) Available at https://www.theglobalfund.org/media/6960/core_combatfraudcorruption_policy_en.pdf

[3] These principles comply with the Uniform Guidelines for Investigations, Conference of International Investigators, 06.2009; available at: http://www.conf-int-investigators.org/?page_id=13, accessed 1.12.2017.

[4] Global Fund Code of Conduct for Suppliers (15.12.2009), § 17-18, available at: https://www.theglobalfund.org/media/3275/corporate_codeofconductforsuppliers_policy_en.pdf, and the Code of Conduct for Recipients of Global Fund Resources (16.07.2012), §1.1 and 2.3, available at: https://www.theglobalfund.org/media/6011/corporate_codeofconductforrecipients_policy_en.pdf. Note: Grants are typically subject to either the Global Fund's Standard Terms and Conditions of the Program Grant Agreement, or to the Grant Regulations (2014), which incorporate the Code of Conduct for Recipients and mandate use of the Code of Conduct for Suppliers. Terms may vary however in certain grant agreements.

Who we investigate: The OIG investigates Principal Recipients and Sub-recipients, Country Coordinating Mechanisms and Local Fund Agents, as well as suppliers and service providers. Secretariat activities linked to the use of funds are also within the scope of the OIG's work.[5] While the OIG does not typically have a direct relationship with the Secretariat's or recipients' suppliers, its investigations[6] encompass their activities regarding the provision of goods and services. To fulfill its mandate, the OIG needs the full cooperation of these suppliers to access documents and officials.[7]

Sanctions when prohibited practices are identified: When an investigation identifies prohibited practices, the Global Fund has the right to seek the refund of grant funds compromised by the related contractual breach. The OIG has a fact-finding role and does not determine how the Global Fund will enforce its rights. Nor does it make judicial decisions or issue sanctions.[8] The Secretariat determines what management actions to take or contractual remedies to seek in response to the investigation findings.

However, the investigation will quantify the extent of any non-compliant expenditures, including amounts the OIG proposes as recoverable. This proposed figure is based on:

(i) amounts paid for which there is no reasonable assurance that goods or services were delivered (unsupported expenses, fraudulent expenses, or otherwise irregular expenses without assurance of delivery);
(ii) amounts paid over and above comparable market prices for such goods or services; or
(iii) amounts incurred outside of the scope of the grant, for goods or services not included in the approved work plans and budgets or for expenditures in excess of approved budgets.

How the Global Fund prevents recurrence of wrongdoing: Following an investigation, the OIG and the Secretariat agree on management actions that will mitigate the risks that prohibited practices pose to the Global Fund and its recipients' activities. The OIG may make referrals to national authorities for criminal prosecutions or other violations of national laws and support such authorities as necessary throughout the process, as appropriate.

[5] Charter of the Office of the Inspector General (16.05.2019), § 2, 10.5, 10.6, 10.7 and 10.9 available at: https://www.theglobalfund.org/media/3026/oig_officeofinspectorgeneral_charter_en.pdf

[6] Charter of the Office of the Inspector General § 2, and 18.

[7] Global Fund Code of Conduct for Suppliers, § 16-19

[8] Charter of the Office of the Inspector General § 9.1